SC SERIES

SC 5000

Ordering-Example:

Special Sizes Available On Request.

ISO 11901 - 1	075.90.55 (FCA)	W-DX35-6203 (Ford)	EM24.54.700 (Renault)
PG23D (Mazda)	VDI 3003	B8 3180 220 000 001(MB)	39D 878 (VW)
SES-K 5404e (Suzuki)	B2 4006 (BMW)	E24.54.815.G (PSA)	K 32 S (Nissan)

SW

OSAS + OSM = OVER STROKE ACTIVE SAFETY + OVER STROKE MARKER

ACTIVE SAFETY

OSAS

USAS

OPAS

The new code will be supplied only when the old will be out of stock

easy MANIFOLD

* $F1_i$ = Isothermal end force at 100% Cu

** $F1_p$ = Polytrophic end force at 100% Cu

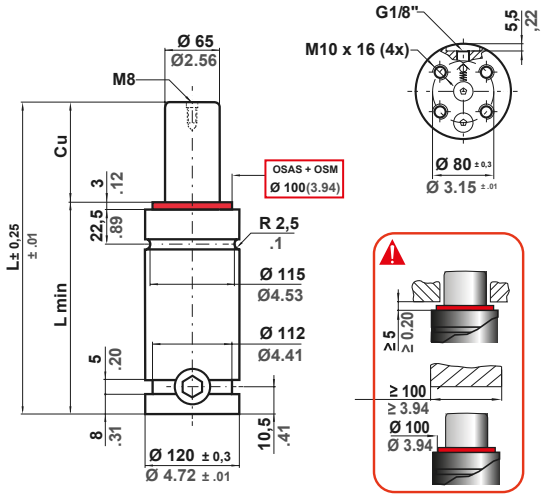

N2	0 - 80 °C 32 - 176 °F	ΔP ± 0,33 %/°C	P max 150 bar 2175 psi	P min 20 bar 290 psi	S 33,18 cm² 5.143 in²	SPM ~ 15 - 50 (at 20°C)	Max Speed 1,8 m/s 70.8 in/s	Maintenance kit 39BMSC05000E

CODE PHASING OUT from 04/2021	NEW	Cu		L		L min		F0 Initial force		$F1_i$ End force *		F1p End force **		V0				PED 2014/68/EU
		mm	inch	mm	inch	mm	inch	daN	lb	daN	lb	daN	lb	cm³	in³	~Kg	~lb	
SC 5000 - 025 - D	◆SC 5000 - 025 - E	25	0.98	190	7.48	165	6.50			6344	14261	7189	16161	450	27.46	10,94	24.12	✓
SC 5000 - 038 - D	SC 5000 - 038 - E	38	1.50	216	8.50	178	7.01			6688	15036	7712	17338	574	35.00	11,46	25.26	✓
SC 5000 - 050 - D	SC 5000 - 050 - E	50	1.97	240	9.45	190	7.48			6914	15543	8059	18118	688	41.96	11,94	26.32	✓
SC 5000 - 063 - D	SC 5000 - 063 - E	63,5	2.50	267	10.51	203,5	8.01			7102	15966	8352	18776	816	49.80	12,56	27.69	✓
SC 5000 - 075 - D	SC 5000 - 075 - E	75	2.95	290	11.42	215	8.46			7226	16245	8547	19213	925	56.47	12,94	28.53	✓
SC 5000 - 080 - D	SC 5000 - 080 - E	80	3.15	300	11.81	220	8.66			7273	16349	8619	19377	973	59.37	13,15	28.99	✓
SC 5000 - 088 - D	SC 5000 - 088 - E	87,5	3.44	315	12.40	227,5	8.96			7354	16533	8748	19666	1044	63.72	13,39	29.52	✓
SC 5000 - 100 - D	SC 5000 - 100 - E	100	3.94	340	13.39	240	9.45			7424	16689	8858	19913	1163	70.97	13,89	30.62	✓
SC 5000 - 113 - D	SC 5000 - 113 - E	113	4.45	365	14.37	252	9.92	4980	11195	7514	16891	9001	20234	1282	78.22	14,40	31.75	✓
SC 5000 - 125 - D	SC 5000 - 125 - E	125	4.92	390	15.35	265	10.43	± 5%		7560	16994	9074	20398	1401	85.48	14,90	32.85	✓
SC 5000 - 138 - D	SC 5000 - 138 - E	138	5.43	415	16.34	277	10.91	150 bar 2175 psi		7627	17146	9181	20640	1520	92.73	15,40	33.95	✓
SC 5000 - 150 - D	SC 5000 - 150 - E	150	5.91	440	17.32	290	11.42			7659	17218	9232	20755	1638	99.98	15,90	35.05	✓
SC 5000 - 160 - D	SC 5000 - 160 - E	160	6.30	460	18.11	300	11.81	+ 20 °C +68 °F		7691	17291	9284	20872	1733	105.78	16,30	35.94	✓
SC 5000 - 175 - D	SC 5000 - 175 - E	175	6.89	490	19.29	315	12.40			7750	17424	9379	21085	1869	114.04	16,90	37.26	✓
SC 5000 - 200 - D	SC 5000 - 200 - E	200	7.87	540	21.26	340	13.39			7809	17555	9473	21296	2107	128.55	17,91	39.48	✓
SC 5000 - 225 - D	SC 5000 - 225 - E	225	8.86	590	23.23	365	14.37			7856	17660	9549	21466	2344	143.05	18,91	41.69	✓
SC 5000 - 250 - D	SC 5000 - 250 - E	250	9.84	640	25.20	390	15.35			7894	17747	9611	21607	2582	157.56	19,91	43.89	✓
SC 5000 - 275 - D	SC 5000 - 275 - E	275	10.83	690	27.17	415	16.34			7927	17820	9664	21725	2820	172.06	20,92	46.12	✓
SC 5000 - 300 - D	SC 5000 - 300 - E	300	11.81	740	29.13	440	17.32			7954	17882	9708	21825	3057	186.56	21,92	48.33	✓

◆ Disposable

SC SERIES

SC 5000

Ordering-Example:
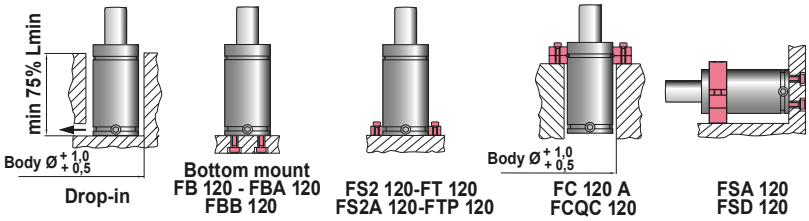
Special Sizes Available On Request.