# ML 7500

SW

**ACTIVE SAFETY**

OSAS

USAS

OPAS

Il nuovo codice sarà fornito solo ad esaurimento del vecchio

The new code will be supplied only when the old will be out of stock

Der neue Kode wird geliefert nur wenn der alte nicht mehr im Lager ist

Le nouveau code sera fourni uniquement lorsque le vieux stock sera ecoulé

El nuevo código será suministrado sólo cuando el viejo está fuera de stock

O novo código irá ser fornecido apenas quando o antigo esgotar stock

easy MANIFOLD

*** $F1_i$ =** Isothermal end force at 100% Cu

**** $F1_p$ =** Polytrophic end force at 100% Cu

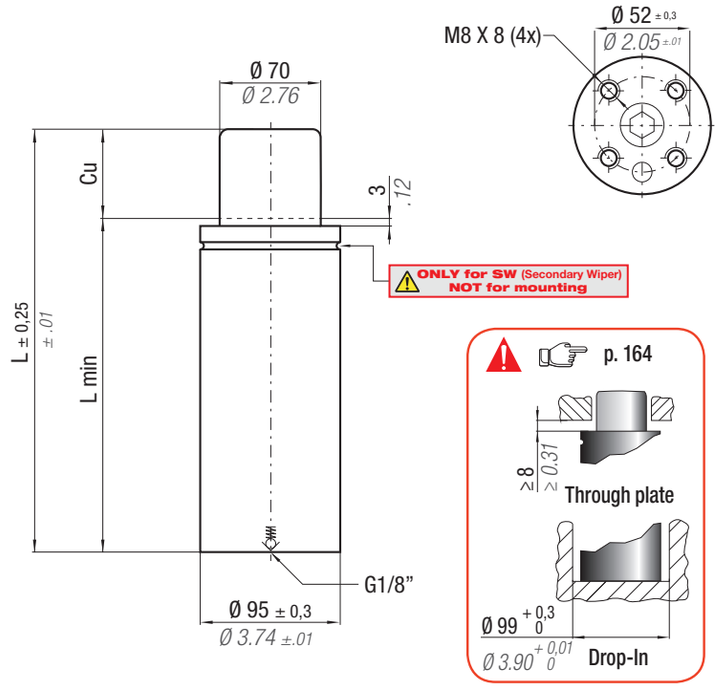


| $N_2$ | °F 32 - 176 | °C 0 - 80 | ΔP ± 0,33 %/°C | P max 200 bar 2900 psi | P min 20 bar 290 psi | S 38,48 cm² 5.964 in² | SPM ~ 20 - 60 (at 20°C) | Max Speed 1,6 m/s | Maintenance kit 39BMML07500C |
|---|---|---|---|---|---|---|---|---|---|

| CODE PHASING OUT from 05/2019 | NEW | Cu mm | Cu inch | L mm | L inch | L min mm | L min inch | F0 Initial force daN | F0 lb | $F1_i$ End force * daN | $F1_i$ lb | $F1_p$ End force ** daN | $F1_p$ lb | V0 cm³ | V0 in³ | ~Kg | ~lb | PED 2014/68/EU |
|---|---|---|---|---|---|---|---|---|---|---|---|---|---|---|---|---|---|---|
| ML 7500 - 015 - C | ML 7500 - 015 - D | 15 | 0.59 | 115 | 4.53 | 100 | 3.94 | 7700 ± 5% | 17310 | 10289 | 23131 | 11469 | 25783 | 291,0 | 17.75 | 3,30 | 7.28 | ✓ |
| ML 7500 - 025 - C | ML 7500 - 025 - D | 25 | 0.98 | 135 | 5.31 | 110 | 4.33 | | | 11499 | 25851 | 13116 | 29486 | 365,0 | 22.27 | 3,58 | 7.89 | ✓ |
| ML 7500 - 038 - C | ML 7500 - 038 - D | 38 | 1.50 | 165 | 6.50 | 127 | 5,00 | 200 bar 2900 psi | | 12377 | 27825 | 14333 | 32222 | 481,0 | 29.34 | 4,01 | 8.84 | ✓ |
| ML 7500 - 050 - C | ML 7500 - 050 - D | 50 | 1.97 | 190 | 7.48 | 140 | 5.51 | | | 13130 | 29517 | 15391 | 34600 | 575,0 | 35.08 | 4,36 | 9.61 | ✓ |
| ML 7500 - 063 - C | ML 7500 - 063 - D | 63 | 2.48 | 220 | 8.66 | 157 | 6.18 | | | 13557 | 30477 | 15996 | 35960 | 691,0 | 42.15 | 4,75 | 10.47 | ✓ |
| ML 7500 - 080 - C | ML 7500 - 080 - D | 80 | 3.15 | 260 | 10.24 | 180 | 7.09 | +20 °C | +68 °F | 13910 | 31271 | 16500 | 37093 | 874,0 | 53.31 | 5,36 | 11.82 | ✓ |

## KIT FOR LINKING

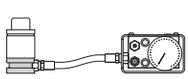

code: 39FML07500B

Sostituire ogni 1.000.000 di cicli. Remplacez à chaque million de cycles.
Replace every 1 million cycles. Reemplazar cada 1 millón de ciclos.
Nach 1 Mio. Hübe austauschen. Substituir a cada 1 milhão de ciclos.

Bottom base dimension

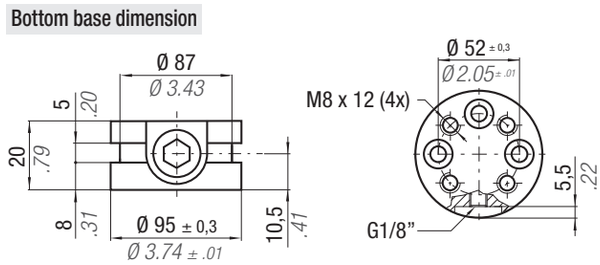


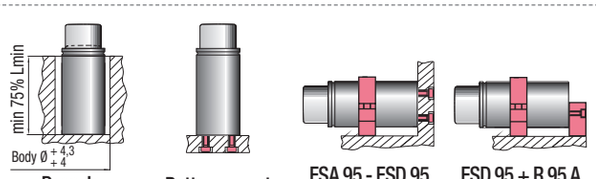


**HOW TO ORDER**

**INSTALLATION GUIDELINE**