GSB OILLESS

M301-10

Gage
Mekanik Dayamalar
Einweiser

Material :
CK60
Forged

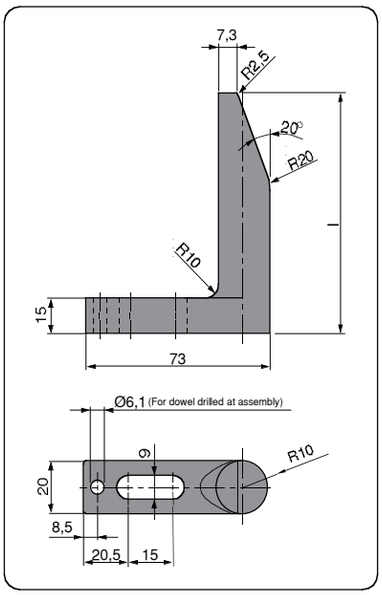

Code	l
M301-10-065	65
M301-10-090	90

GSB CODE:M301-10

GSB OILLESS

M301-11

Gage Hardened
Sertleştirilmiş Mekanik Dayamalar
Einweiser Gehartet

Material :
CK60
Forged
Hardened
HRC 58 ÷ 60

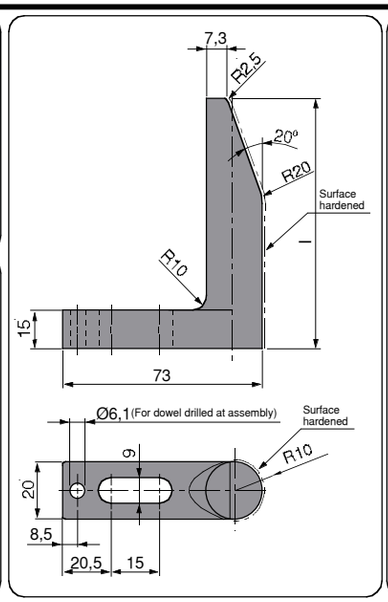

Code	l
M301-11-065	65
M301-11-090	90

GSB CODE:M301-11