GSB OILLESS

M304-08

Air Pins VDI 3002
Hava Pimleri VDI 3002
Druckbolzen VDI 3002

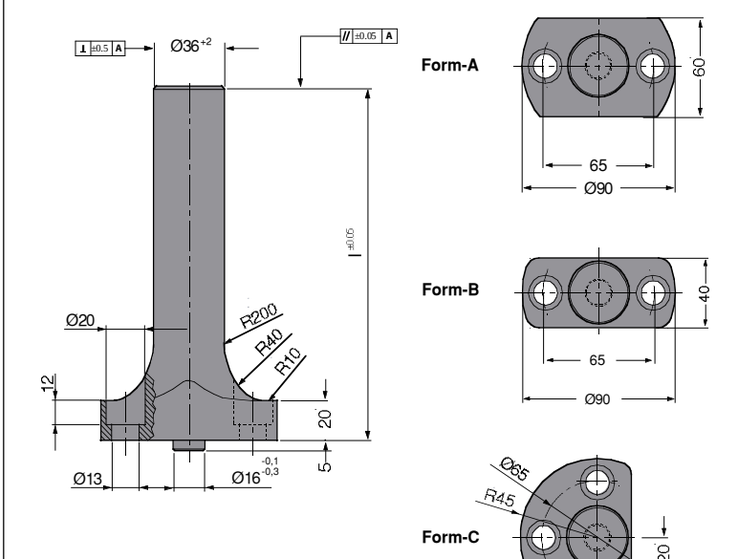

Material :
CK45 / CrMo4
800 ÷ 1000 N/mm²
Forged

Lenght (l) is given by the customer;

Maximum lenght 360

GSB Code:M304-08

VW Code	Form	l	Max Load kN
M304-08-00-l	A	???	50
M304-08-01-l	B	???	50
M304-08-02-l	C	???	50