GSB OILLESS

M317-10
Key
Kama
Passfeder

Material :
CK45

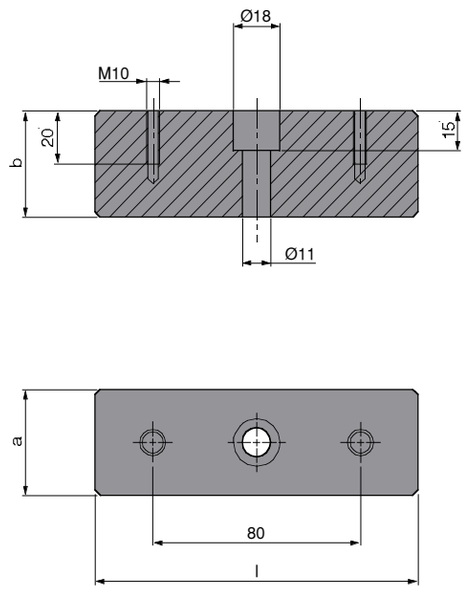

GSB CODE:M317-10

Order Code	a	b	l
M317-10-42125	42	40	125
M317-10-50135	50	48	135
M317-10-50220	50	48	220