B2 2969 11

Removable Die Heels, steel and self-lubricating VDI 3387
Grafitli Çelik Kılavuz Plakalar VDI 3387
Führungslaschen, Stahl mit Festschmierstoff

BMW ID Number	Form	a	b	l_1
2 168 879	A	112	45	250
2 168 880	B	140	45	315
2 168 881	B	190	56	400
2 174 248	B	240	56	500

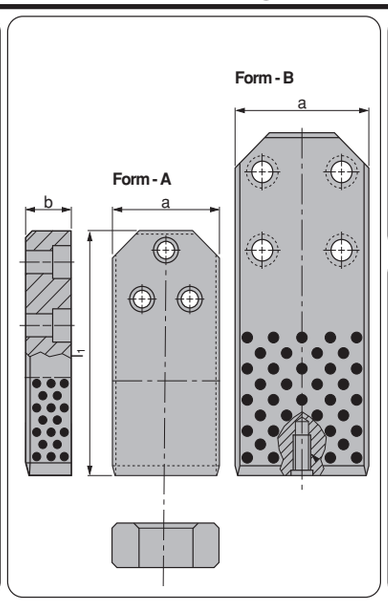

Material :
CK45 with Non-liquid Lubricant
HRC 58 ÷ 60

Direction of Motion

BMW CODE:B2 2969 11

B2 2975 11

Wear strip with two slide surfaces VDI 3357
Bronz Grafitli Kılavuz Plakalar VDI 3357
Gleitleiste, mit zwei Gleitflächen VDI 3357

BMW ID Number	Form	b_1	h	l_1
2 168 883	A	60	30	125
2 168 884	A	60	30	160
2 168 885	B	60	30	200
2 168 886	A	60	40	125
2 168 887	A	60	40	160
2 168 888	B	60	40	200

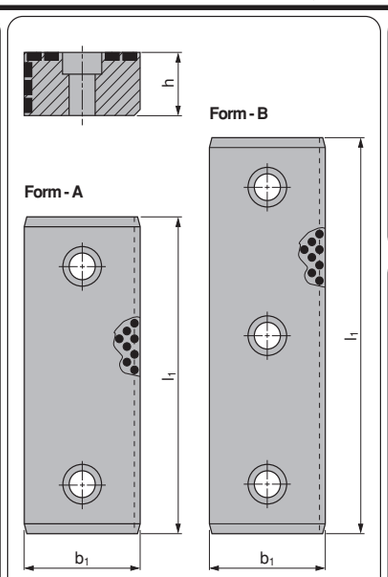

Material :
Bronze with Non-Liquid Lubricant
HB ≥ 190

Direction of Motion

BMW CODE:B2 2975 11