GS3 OILLESS

B8 0110 100 008 806

Washer
Rondela
Scheibe

MERCEDES-BENZ Code
B8 0110 0373388

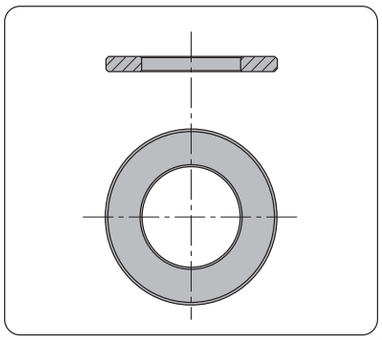

Material :
CK45

MERCEDES-BENZ Code: B8 0110 100 008 806

GS3 OILLESS

B8 0111 131 008 812

Kama
Key
Passfeder

MERCEDES-BENZ Code	b	h	l_1
B8 0111 0455258	22	14	50
B8 0111 0455442	22	14	90
B8 0111 0455443	22	14	150
B8 0111 0455444	22	14	240
B8 0111 0332858	30	30	100
B8 0111 0370158	30	30	175
B8 0111 0333602	30	30	250
B8 0111 0332733	22	14	50
B8 0111 0332734	22	14	90
B8 0111 0332735	22	14	150
B8 0111 0534548	22	14	240

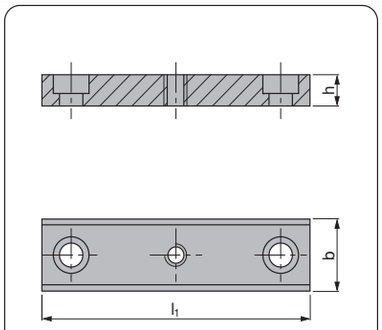

Material :
CK45

MERCEDES-BENZ Code: B8 0111 131 008 812

GS3 OILLESS

B8 0111 131 008 812

Kama
Key
Passfeder

MERCEDES-BENZ Code	b	h	l_1
B8 0111 1081863	30	30	100
B8 0111 1081865	22	14	50
B8 0111 1081867	22	14	90

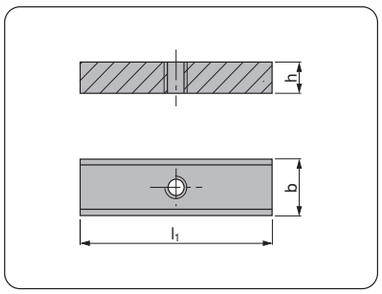

Material :
CK45

MERCEDES-BENZ Code: B8 0111 131 008 812