M305-04

Lifters with Gas Springs, Sleeve and Bushes, Self-lubricating

Ordering-Example: **Diferent Lengths On Request.**

Material (Sleeve): CK45 Material : 90MnCrV8
Material (Bushes): Bronze with Non-Liquid Lubricant HB ≥ 190

1 Material (Sleeve): CK45
Hardened HRC 58 ÷ 62
2 Material (Bushes):
Bronze with Non-Liquid Lubricant
HB ≥ 190
3 Gas Spring
4 DIN 472
5 M10x60 DIN 912
6 Material : 90MnCrV8
Hardened HRC 54 ÷ 60

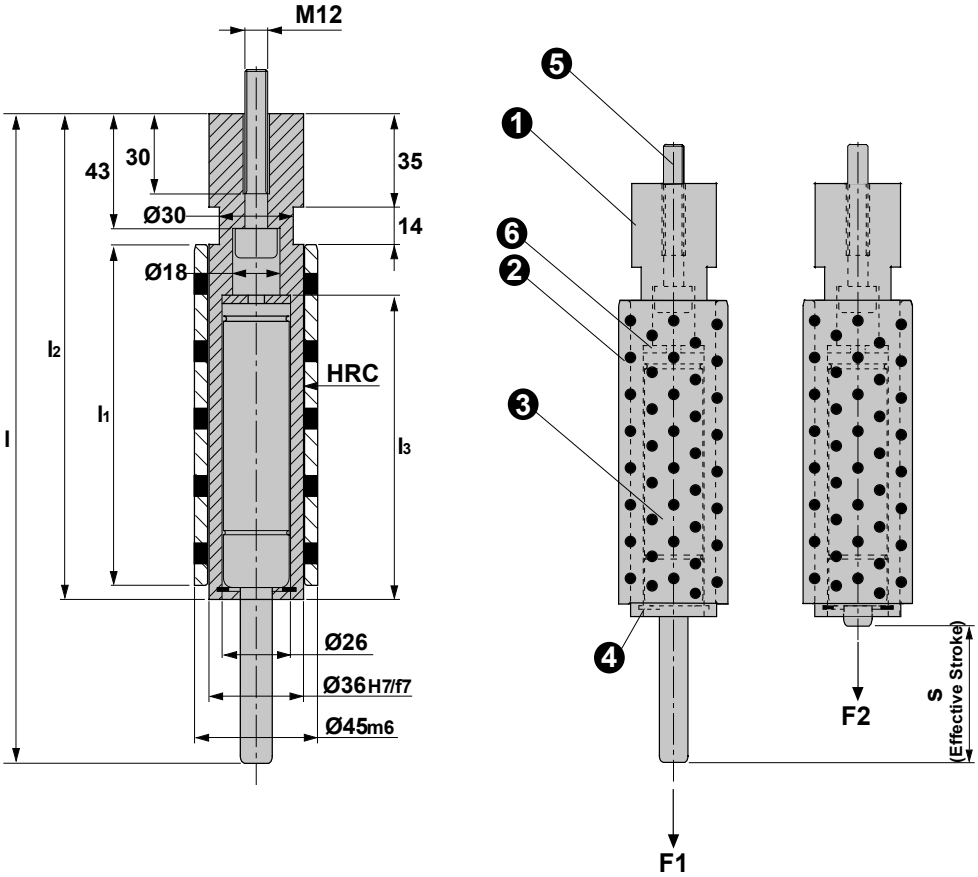

CODE	l	l1	l2	l3	F1 (daN)	F2 (daN)	s
M305-04-50050	240	115	182	118	50	68	50
M305-04-50100	240	115	182	118	100	136	50
M305-04-50150	240	115	182	118	150	204	50
M305-04-50200	240	115	182	118	200	272	50
M305-04-65050	274	145	200	135	50	68	65
M305-04-65100	274	145	200	135	100	136	65
M305-04-65150	274	145	200	135	150	204	65
M305-04-65200	274	145	200	135	200	272	65
M305-04-80050	314	170	220	155	50	68	80
M305-04-80100	314	170	220	155	100	136	80
M305-04-80150	314	170	220	155	150	204	80
M305-04-80200	314	170	220	155	200	272	80