KONEK PSN

RT 750

PG24D (Mazda)	K 32 R (Nissan)	EM24.54.700 (Renault)

SPECIAL SPRINGS

SW

ACTIVE SAFETY

OSAS

USAS

OPAS

OSAS + OSM = OVER STROKE ACTIVE SAFETY + OVER STROKE MARKER

Il nuovo codice sarà fornito solo ad esaurimento del vecchio

The new code will be supplied only when the old will be out of stock

Der neue Kode wird nur angegeben, wenn der alte nicht mehr lieferbar ist

Le nouveau code sera fourni uniquement lorsque le vieux stock sera ecoulé

El nuevo código será suministrado sólo cuando se agoten las existencias del antiguo

O novo código irá ser fornecido apenas quando o antigo esgotar stock

*** $F1_i$ =** Isothermal end force at 100% Cu

**** $F1_p$ =** Polytrophic end force at 100% Cu

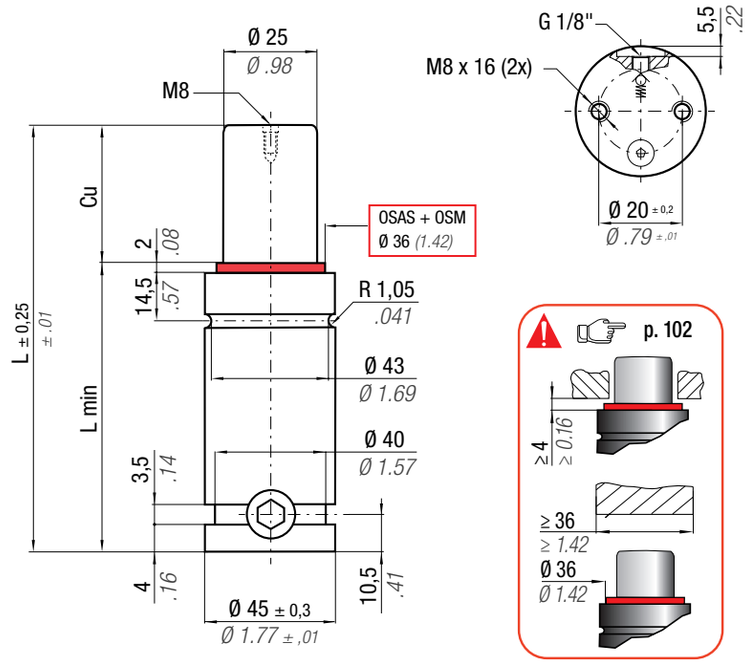

N_2	0 - 80 °C / 32 - 176 °F	ΔP ± 0,33 %/°C	P max 150 bar / 2175 psi	P min 20 bar / 290 psi	S 4,91 cm² / 0.761 in²	SPM ~ 20 - 100 (at 20°C)	Max Speed 1,8 m/s / 70.8 in/s	Maintenance kit 39BMRV00750C

CODE PHASING OUT from 04/2021	NEW	Cu mm	Cu inch	L mm	L inch	L min mm	L min inch	F0 Initial force daN	F0 lb	$F1_i$ End force * daN	$F1_i$ lb	$F1_p$ End force ** daN	$F1_p$ lb	V0 cm³	V0 in³	~Kg	~lb	PED 2014/68/EU
RT 750 - 010 - A	◆ RT 750 - 010 - B	10	0.39	67	2.64	57	2.24	740 ± 5%	1664	1026	2307	1198	2693	20,2	1.23	0,50	1.10	✓
RT 750 - 013 - A	◆ RT 750 - 013 - B	13	0.51	73	2.87	60	2.36			1065	2394	1258	2828	23,9	1.46	0,52	1.15	✓
RT 750 - 016 - A	RT 750 - 016 - B	16	0.63	79	3.11	63	2.48			1095	2461	1305	2933	27,7	1.69	0,54	1.19	✓
RT 750 - 019 - A	RT 750 - 019 - B	19	0.75	85	3.35	66	2.60			1118	2514	1342	3017	31,5	1.92	0,56	1.23	✓
RT 750 - 025 - A	RT 750 - 025 - B	25	0.98	97	3.82	72	2.83			1153	2593	1398	3143	39,1	2.39	0,60	1.32	✓
RT 750 - 032 - A	RT 750 - 032 - B	32	1.26	111	4.37	79	3.11			1182	2656	1444	3246	47,9	2.92	0,64	1.41	✓
RT 750 - 038 - A	RT 750 - 038 - B	38	1.50	123	4.84	85	3.35	150 bar	2175psi	1199	2696	1473	3311	55,5	3.39	0,68	1.50	✓
RT 750 - 050 - A	RT 750 - 050 - B	50	1.97	147	5.79	97	3.82			1224	2752	1514	3403	70,6	4.31	0,76	1.68	✓
RT 750 - 063 - A	RT 750 - 063 - B	63	2.48	173	6.81	110	4.33	+ 20 °C	+68 °F	1242	2792	1543	3468	87,0	5.31	0,84	1.85	✓
RT 750 - 075 - A	RT 750 - 075 - B	75	2.95	197	7.76	122	4.80			1253	2818	1562	3511	102,1	6.23	0,92	2.03	✓
RT 750 - 080 - A	RT 750 - 080 - B	80	3.15	207	8.15	127	5.00			1257	2827	1568	3526	108,4	6.61	0,95	2.09	✓
RT 750 - 100 - A	RT 750 - 100 - B	100	3.94	247	9.72	147	5.79			1269	2854	1588	3571	133,7	8.16	1,08	2.38	✓
RT 750 - 125 - A	RT 750 - 125 - B	125	4.92	297	11.69	172	6.77			1280	2877	1605	3609	165,2	10.08	1,24	2.73	✓

◆ Disposable

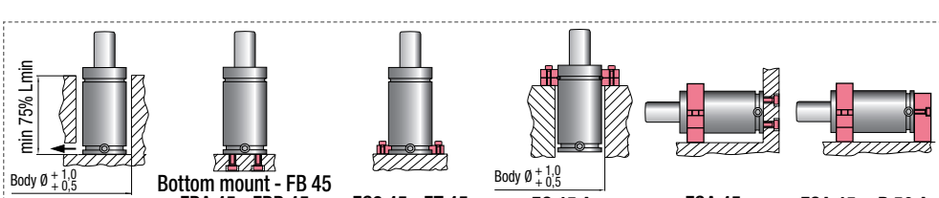

HOW TO ORDER

INSTALLATION GUIDELINE