AS

AUTOMATIC SAFETY STRAP

CUMSA
INNOVATIVE SOLUTIONS FOR YOUR MOLDS

Special Sizes Available On Request.

Cad Insertion Point

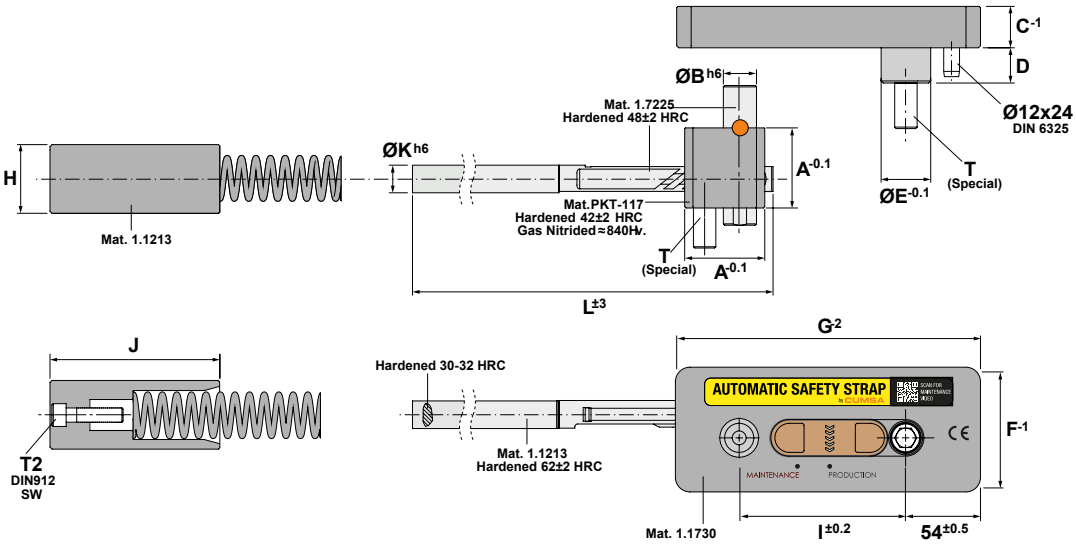

Ref.	A	B	C	D	E	F	G	H	I	J	K	L	M	N
AS.462024	46	20	25	21	26	70	190	39	100	100	16	619	24	30
AS.582430	58	24	30	25	36	90	220	45	120	110	20	644	30	54
AS.764040	76	40	40	32	42	100	260	48	152	120	24	674	32	60

P	Q	R	S	T	T2	U	V	W	X	Y	Z	SW	Max. Mold Size
43.8	20.8	18	12.3	M12x60	M8x50	31.8	12.3	35	15	35	55	10	10 Tons
56	24	36	17	M16x70	M10x50	40	17	40	18	43.5	69	14	20 Tons
68	40	34	18	M16x90	M10x50	56	25.2	50	26	60	85	14	30 Tons

WAREHOUSE

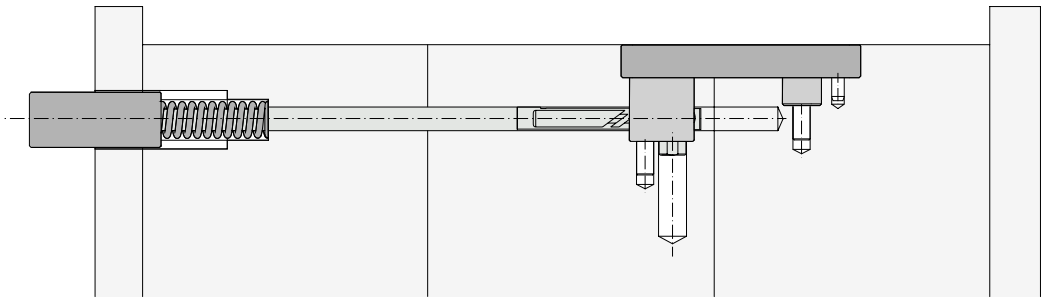

PRODUCTION

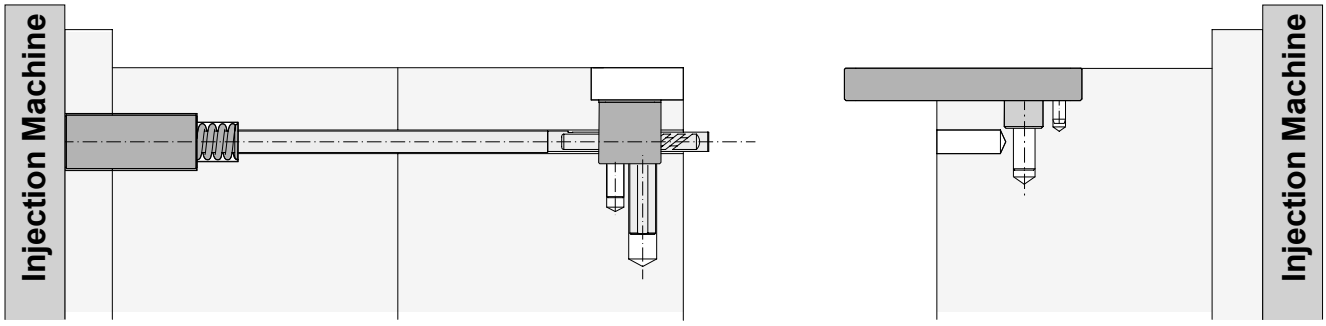

AS

INSTALLATION GUIDELINES

CUMSA
INNOVATIVE SOLUTIONS FOR YOUR MOLDS

Special Sizes Available On Request.

● Cad Insertion Point

Core Housing

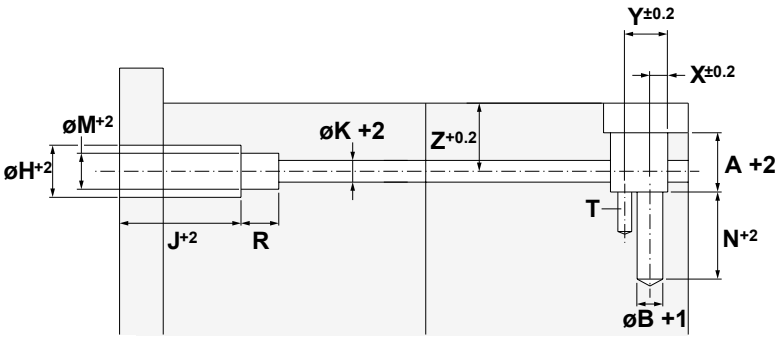
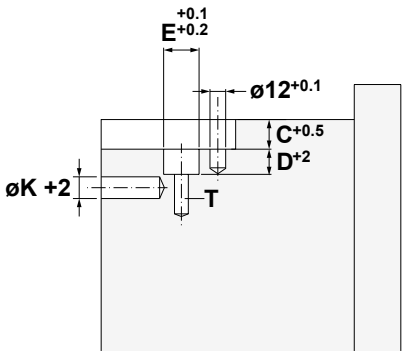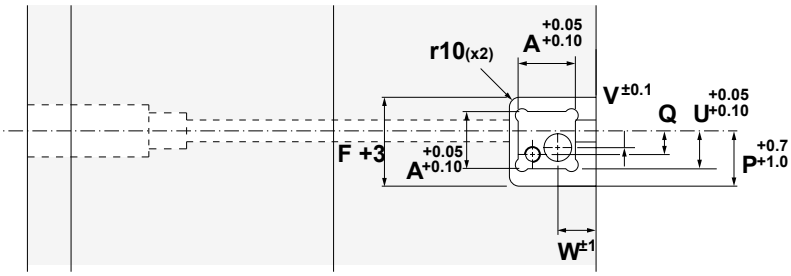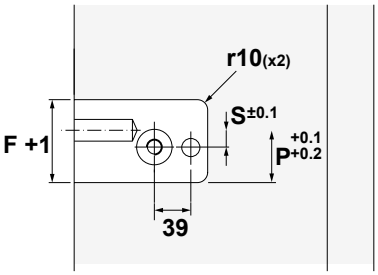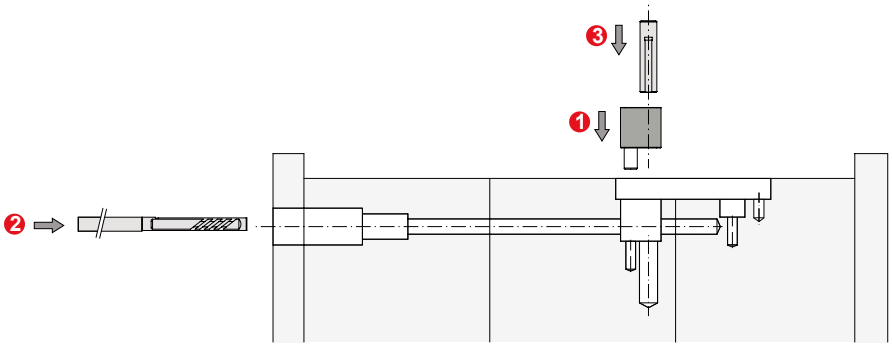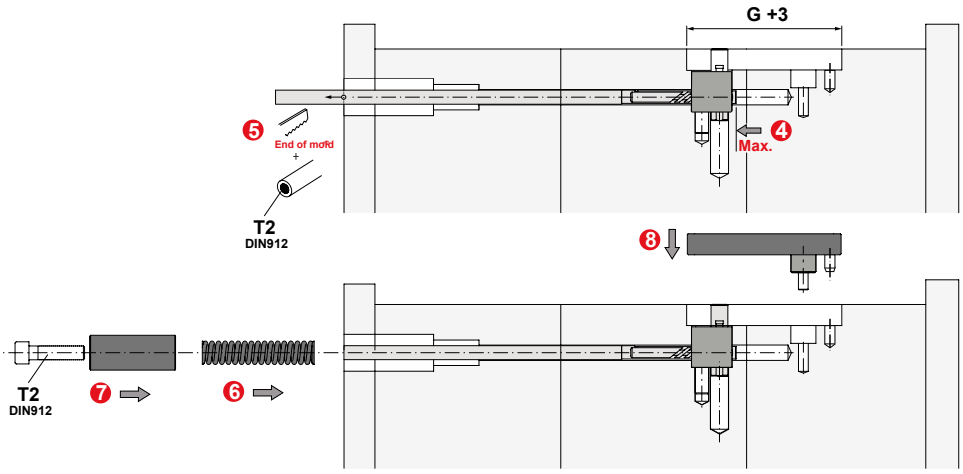
Cavity Housing