SA

SPRUE ADJUSTER

CUMSA
INNOVATIVE SOLUTIONS FOR YOUR MOLDS

Special Sizes Available On Request.

● Cad Insertion Point

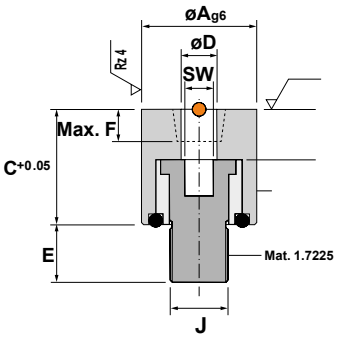

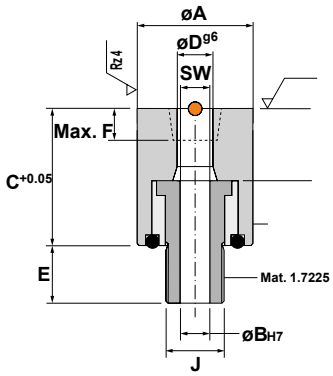

IMPORTANT! With ejector bore.

Ref.	A	C	D	E	F	H	J	SW
SA.120014	12	14	4.1	6	3	7	M6	3
SA.160016	16	16	5.1	8	5	8.5	M8	4
SA.200018	20	18	6.1	10	6	11	M10	5
SA.240022	24	22	9.5	12	10	14.5	M14	8

Ref.	A	B	C	D	E	F	H	J	SW
SA.120314	12	3	14	4.1	6	3	7	M6	3
SA.160416	16	4	16	5.1	8	5	8.5	M8	4
SA.200518	20	5	18	6.1	10	6	11	M10	5
SA.240822	24	8	22	9.5	12	10	14.5	M14	8

Installation Guidelines

Trapezoidal runner

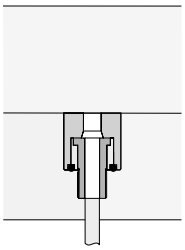

Full round runner

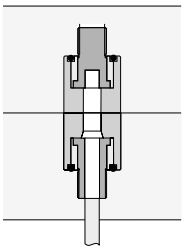

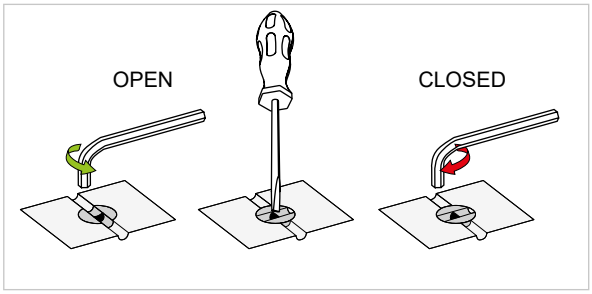
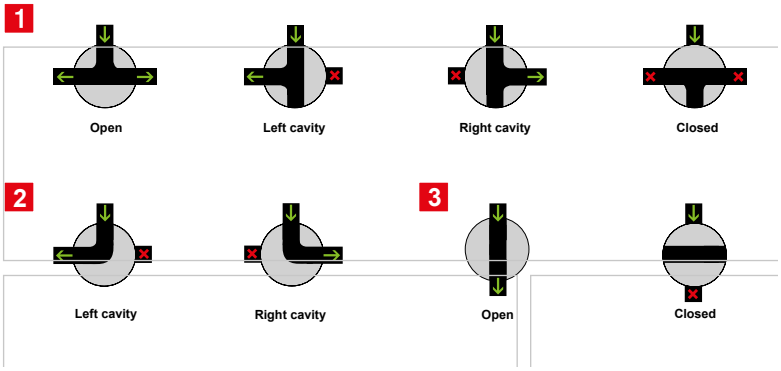
Poosible configurations