SM

HOSE RETAINER

CUMSA
INNOVATIVE SOLUTIONS FOR YOUR MOLDS

Special Sizes Available On Request.

● Cad Insertion Point

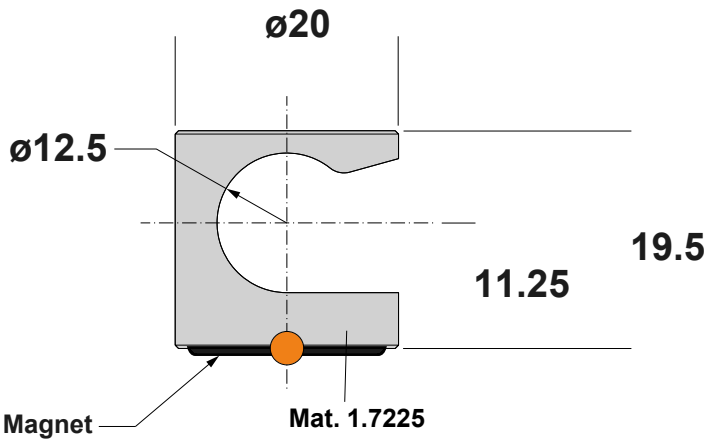

Ref.
MB.122056
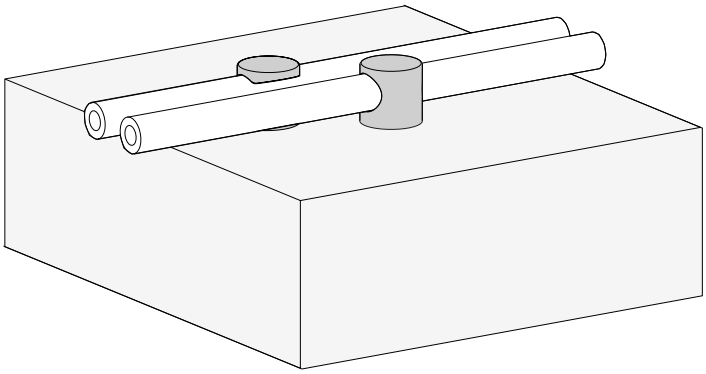
Installation Guidelines