BA-BE-BT

EJECTOR BASE

CUMSA
INNOVATIVE SOLUTIONS FOR YOUR MOLDS

Special Sizes Available On Request.

● Cad Insertion Point

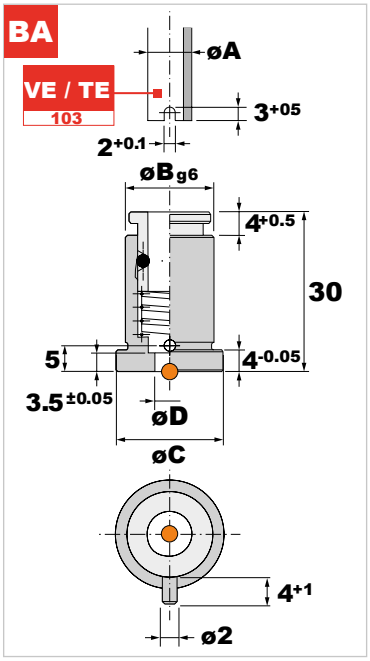

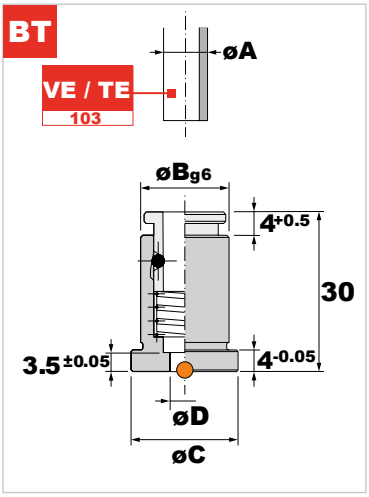

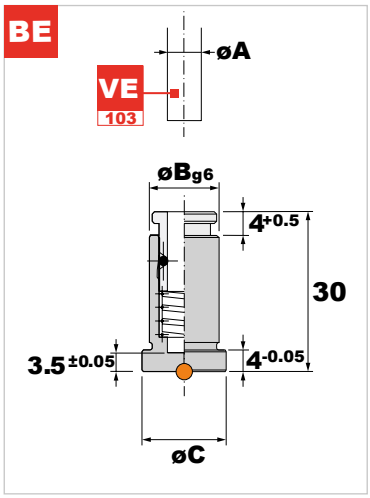

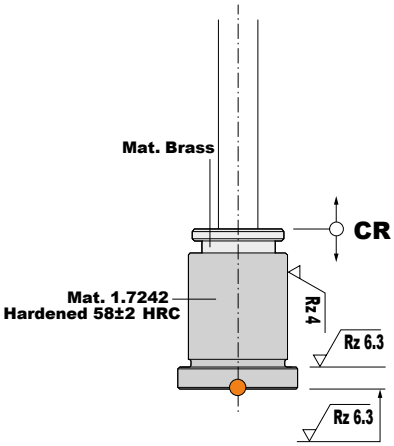

Ref.	A	B	C	D	CR (N)
BA.061418	6	14	18	3.5	> 3.800
BA.081620	8	16	20	5.5	> 4.700
BA.101822	10	18	22	7	> 6.400
BA.122024	12	20	24	9	> 7.600

Ref.	A	B	C	D	CR (N)
BT.061418	6	14	18	4.2	> 3.800
BT.081620	8	16	20	6.2	> 4.700
BT.101822	10	18	22	7	> 6.400
BT.122024	12	20	24	9	> 7.600

Ref.	A	B	C	CR (N)
BE.031115	3	11	15	> 1.800
BE.041216	4	12	16	> 1.800
BE.051317	5	13	17	> 2.800

BA-BE-BT

EJECTOR BASE

CUMSA
INNOVATIVE SOLUTIONS FOR YOUR MOLDS

Special Sizes Available On Request.

● Cad Insertion Point
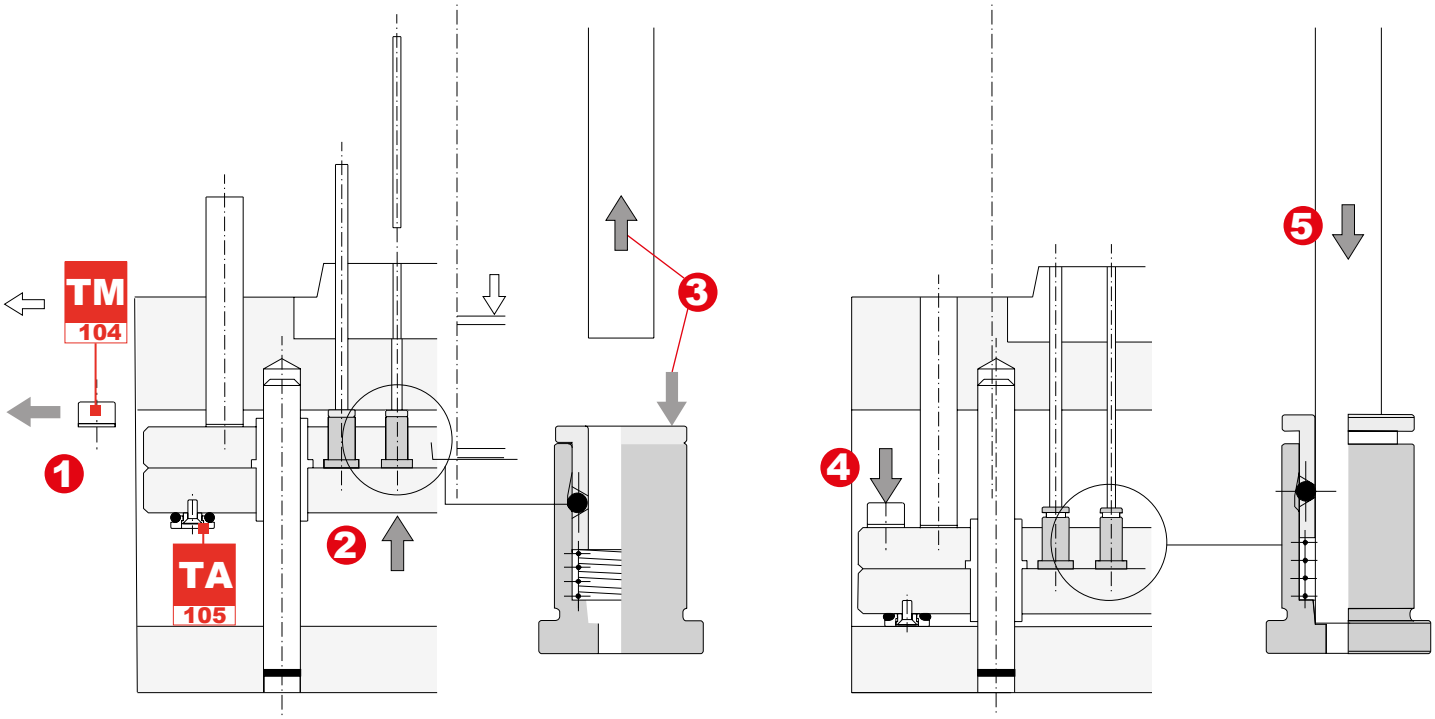
Installation Guidelines