DE

DOUBLE EJECTION

CUMSA
INNOVATIVE SOLUTIONS FOR YOUR MOLDS

Special Sizes Available On Request.

● Cad Insertion Point

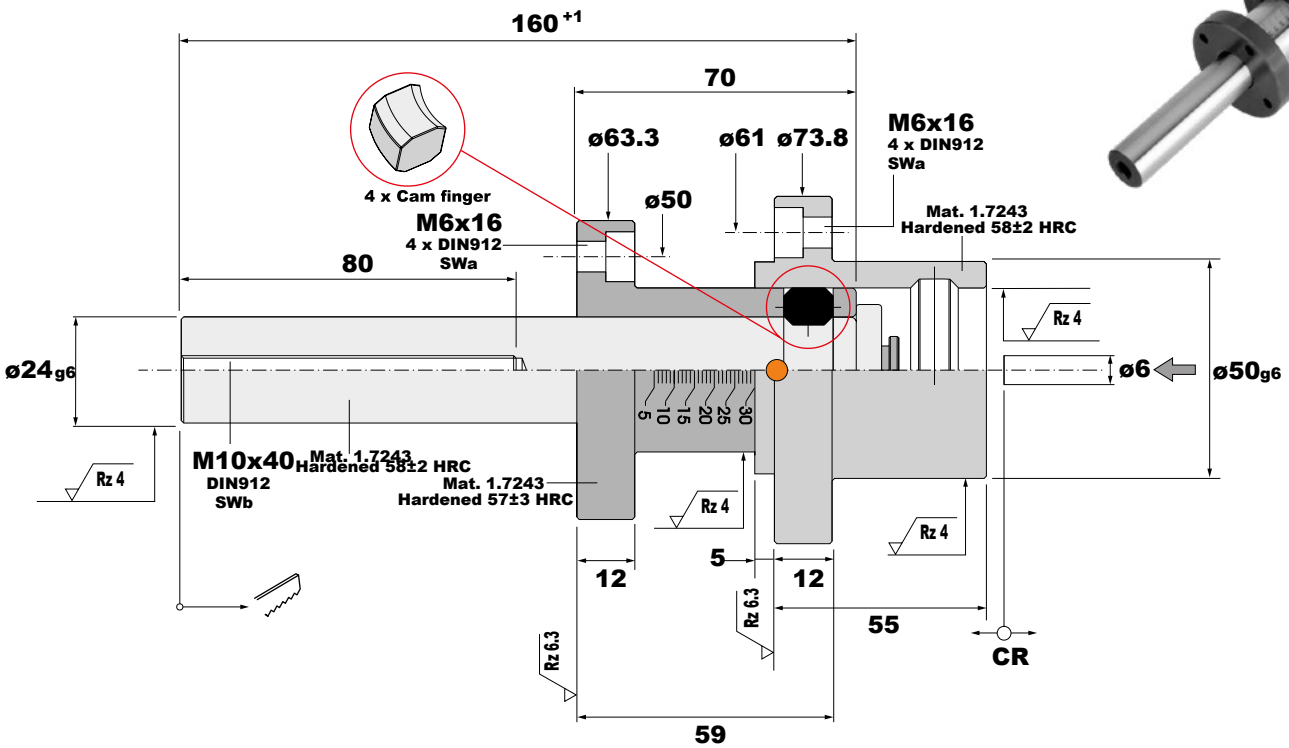

Ref.	CR(N)	SWa	SWb
DE.243648	3.800	5	8

IMPORTANT!
Use the scale to adjust the first opening from 5 to 30mm.

IMPORTANT!

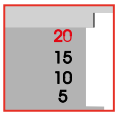

→ **Adjustable 1st opening**
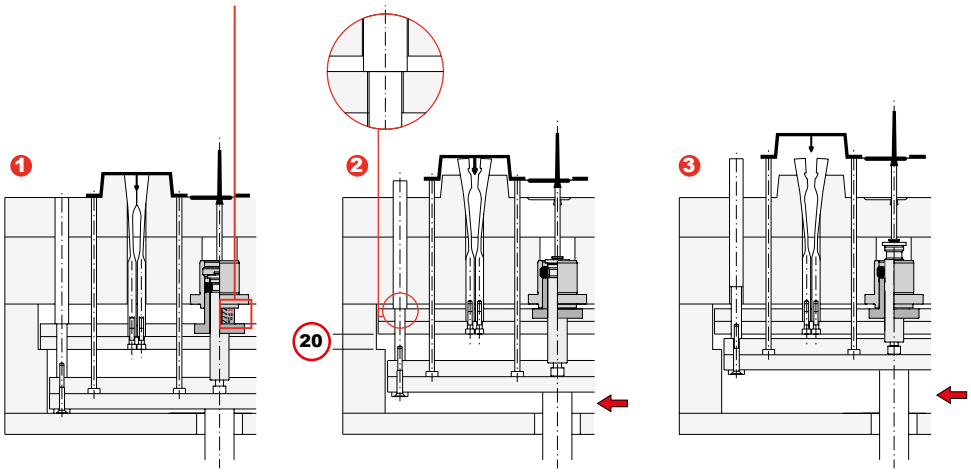
→ **And free 2nd Opening**