EP

PLATE ACCELERATOR

CUMSA
INNOVATIVE SOLUTIONS FOR YOUR MOLDS

Special Sizes Available On Request.

● Cad Insertion Point

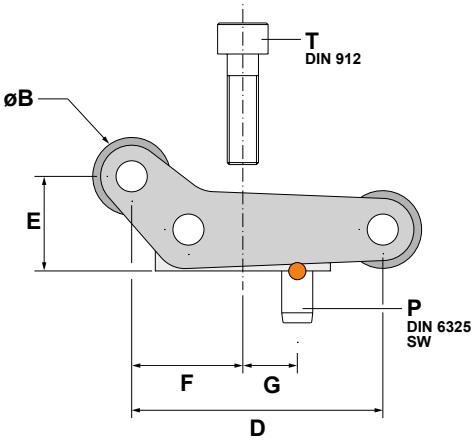

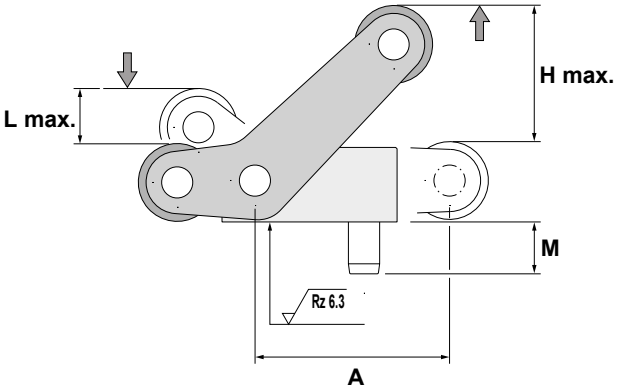

Ref.	A	B	C	D	E	F	G	H max.	L max.	M	N	P	T	Max. Force	SW
EP.200813	20	8	13.2	25.8	9.4	11.4	5.9	11.6	4.4	5	15	Ø2.5x10	M3x12	125 kg.	2.5
EP.251016	25	10	16	32.3	11.8	14.3	7	15	5.7	6	18.5	Ø3x12	M4x16	250 kg.	3
EP.371522	37.5	15	22	48.5	17.7	21.5	10.5	23.5	9.1	8	25	Ø4x16	M6x25	350 kg.	5
EP.502030	50	20	30	64.6	23.6	28.6	14	32	12.5	10	34	Ø5x20	M8x30	800 kg.	6

Installation Guidelines

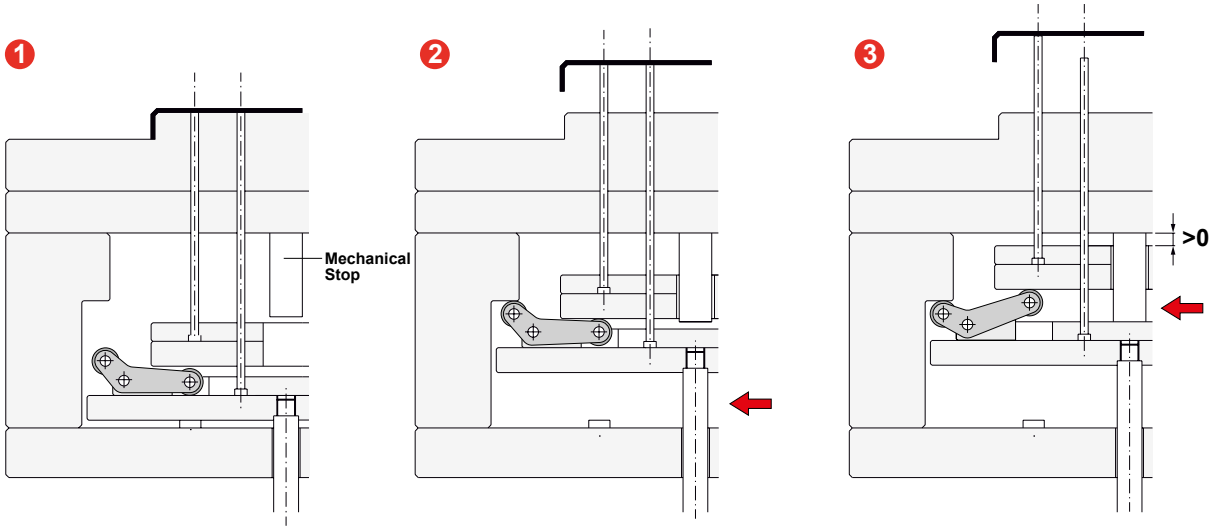
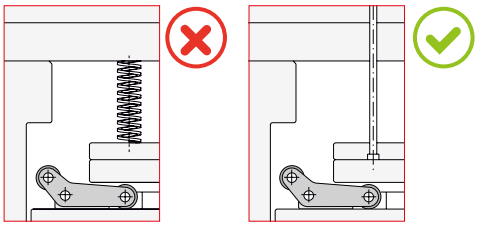
IMPORTANT!