LR

THREADED LIMITER

CUMSA
INNOVATIVE SOLUTIONS FOR YOUR MOLDS

Special Sizes Available On Request.

Cad Insertion Point

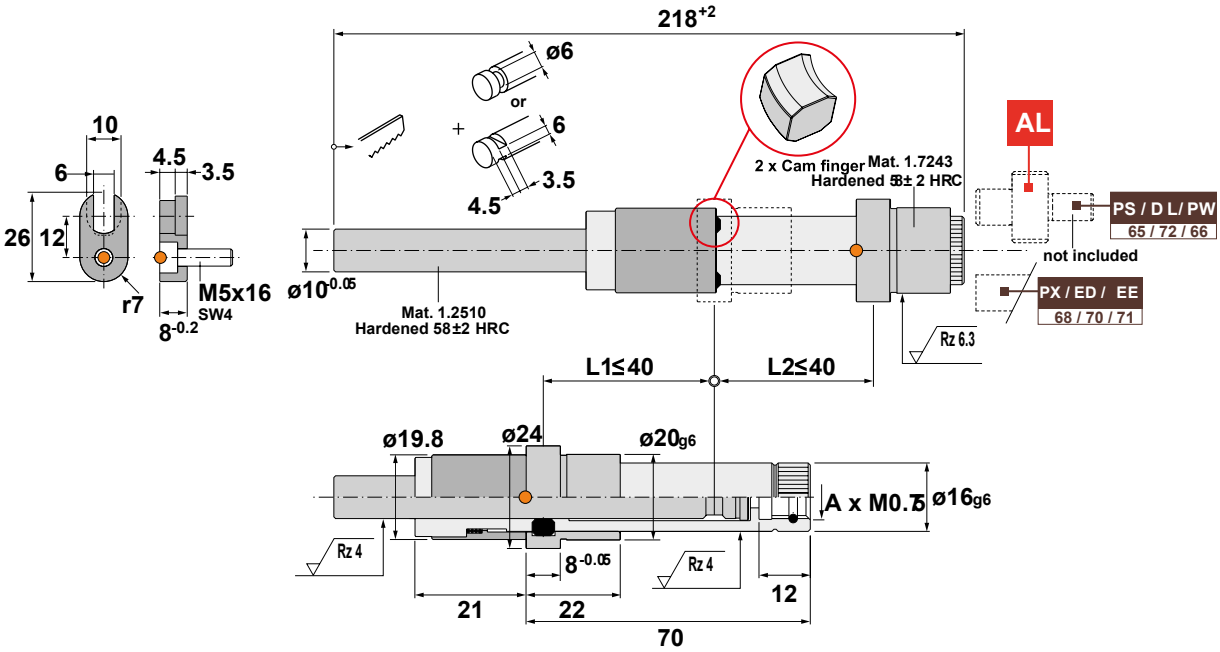

Ref.	A
LR.061620	6
LR.081620	8
LR.101620	10
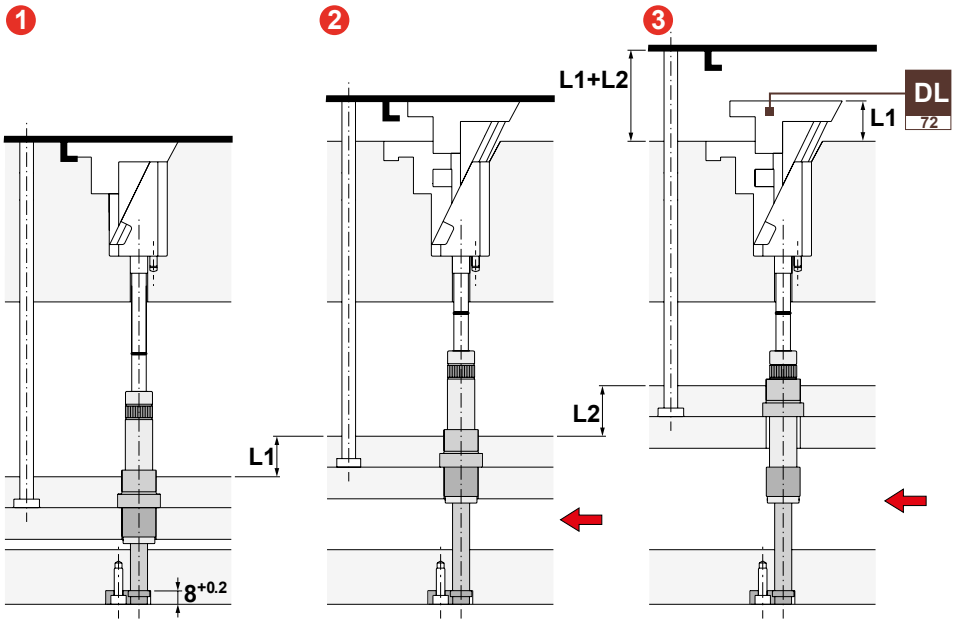
Installation Guidelines