GR

ANGLE PIN HOUSING

CUMSA
INNOVATIVE SOLUTIONS FOR YOUR MOLDS

Special Sizes Available On Request.

● Cad Insertion Point

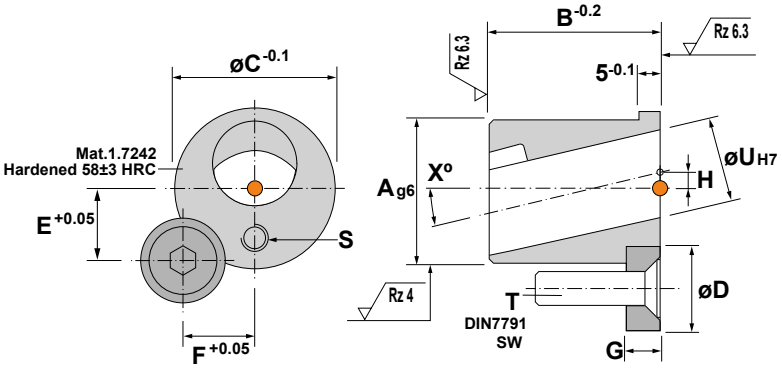

Ref.	A	B	C	D	E	F	G	H	S	T	U	X		SW
GR.182622-..	18	26	22	12	10.8	7.5	6	3.8	M5x5	M5x16	10	10	15	3
GR.222826-..	22	28	26	16	11	11	6	4	M6x6	M6x16	12	10	15	4
GR.283432-..	28	34	32	16	13	13	6	5	M6x6	M6x16	16	10	15	4
GR.344038-..	34	40	38	20	17	17	8	5.5	M8x6	M8x20	20	10	15	5
GR.424546-..	42	45	46	20	19.5	19.5	8	6	M8x6	M8x20	24	10	15	5
GR.465050-..	46	50	50	20	21	21	8	7	M8x6	M8x20	28	10	15	5

IMPORTANT! Indicate the desired X dimension after the reference.