DL

DOG LIFTER - DL

CUMSA
INNOVATIVE SOLUTIONS FOR YOUR MOLDS

Special Sizes Available On Request.

● Cad Insertion Point

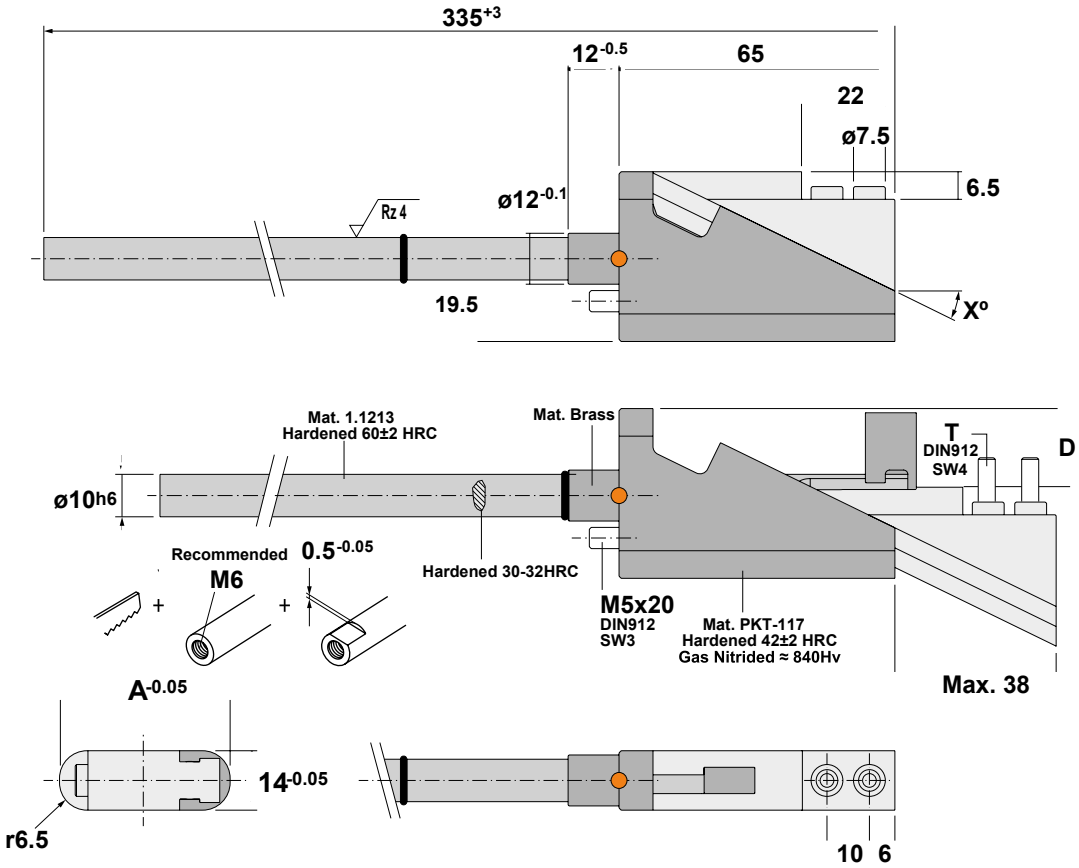

Ref.	A	D	T	X
DL.143465	34	12	M4x20	18
DL.144065	40	18	M4x25	26
DL.144665	46	22	M4x30	31

IMPORTANT! Special angles available upon request, please contact: technical@cumsa.com

DL

DOG LIFTER - DL

CUMSA
INNOVATIVE SOLUTIONS FOR YOUR MOLDS

Special Sizes Available On Request.

● Cad Insertion Point
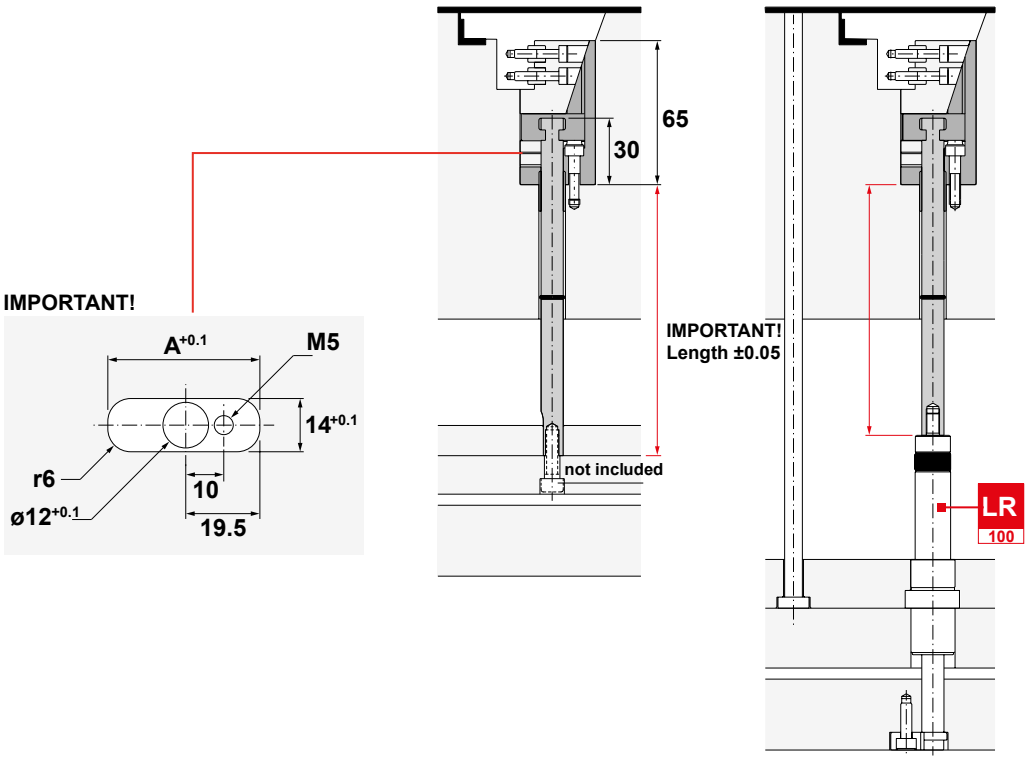
Installation Guidelines