PT+PA

PNEUMATIC PISTON

CUMSA
INNOVATIVE SOLUTIONS FOR YOUR MOLDS

Special Sizes Available On Request.

● Cad Insertion Point

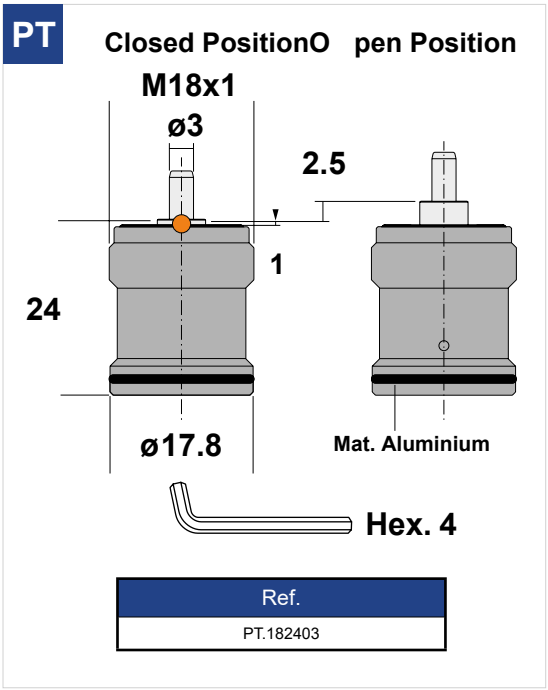

Ref.
PT.182403

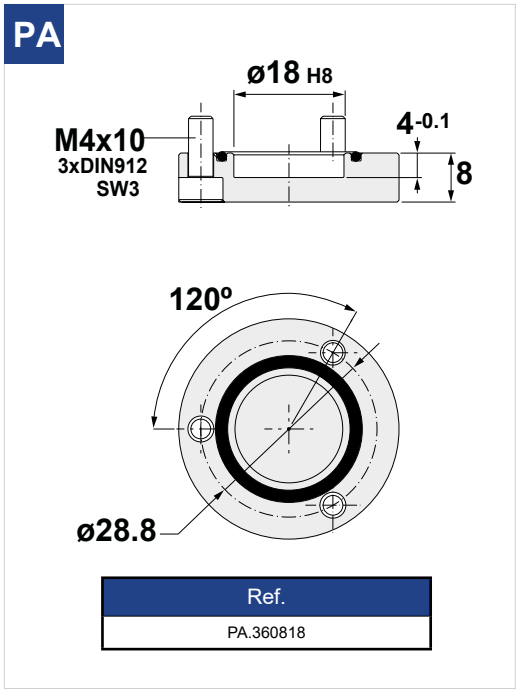

Ref.
PA.360818

IMPORTANT! PA must be ordered separately.

Installation Guidelines

Option PT

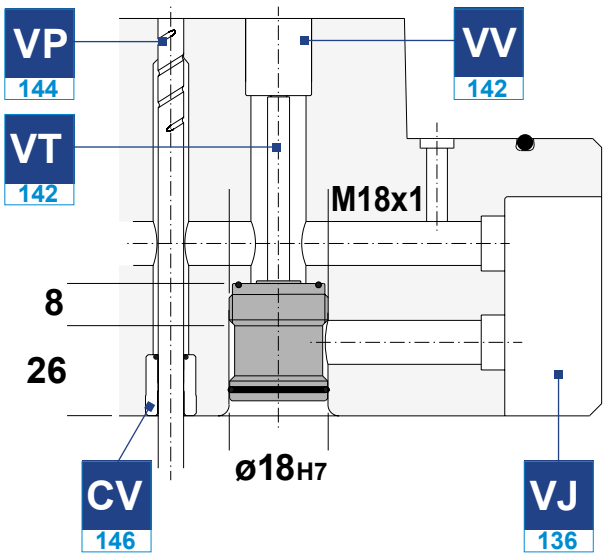
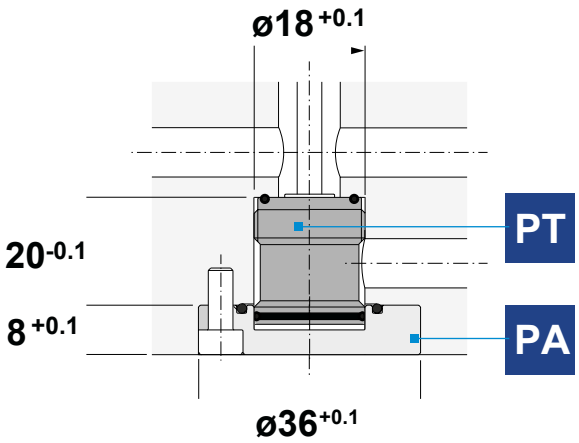
Option PT+PA