VM

VACUUM CONTROL

CUMSA
INNOVATIVE SOLUTIONS FOR YOUR MOLDS

Special Sizes Available On Request.

● Cad Insertion Point

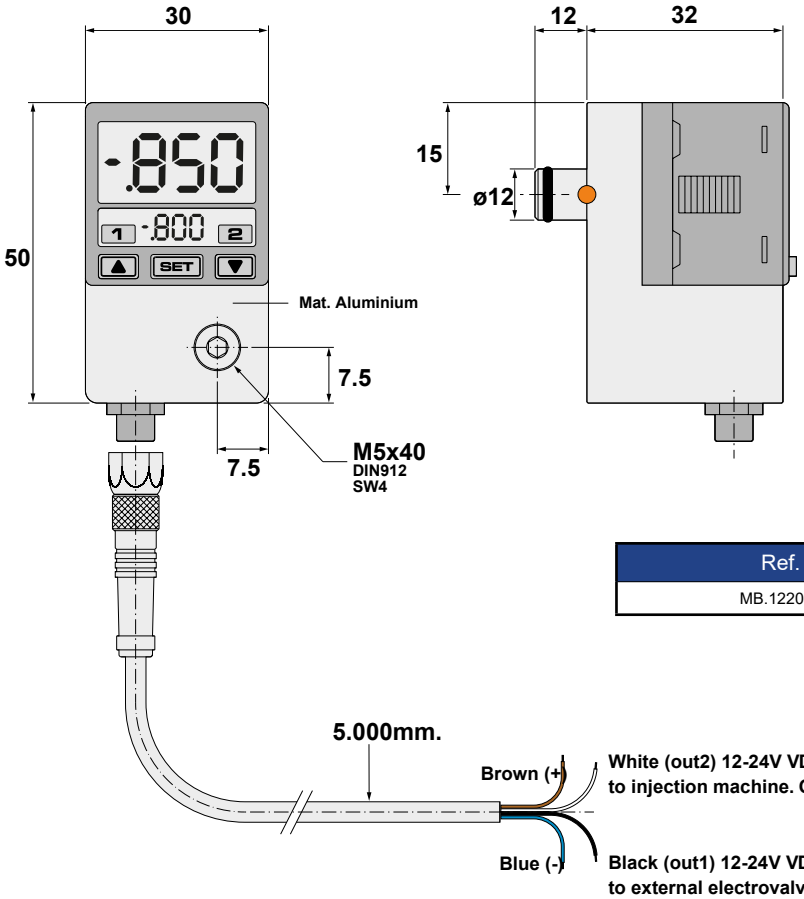

Ref.
MB.122056

White (out2) 12-24V VDC 0.5A (500mA) to injection machine. OK injection.

Black (out1) 12-24V VDC 0.5A (500mA) to external electrovalve. Recommended solenoid 3/2 N.O.

VM

VACUUM CONTROL

CUMSA
INNOVATIVE SOLUTIONS FOR YOUR MOLDS

Special Sizes Available On Request.

Cad Insertion Point

Installation Guidelines

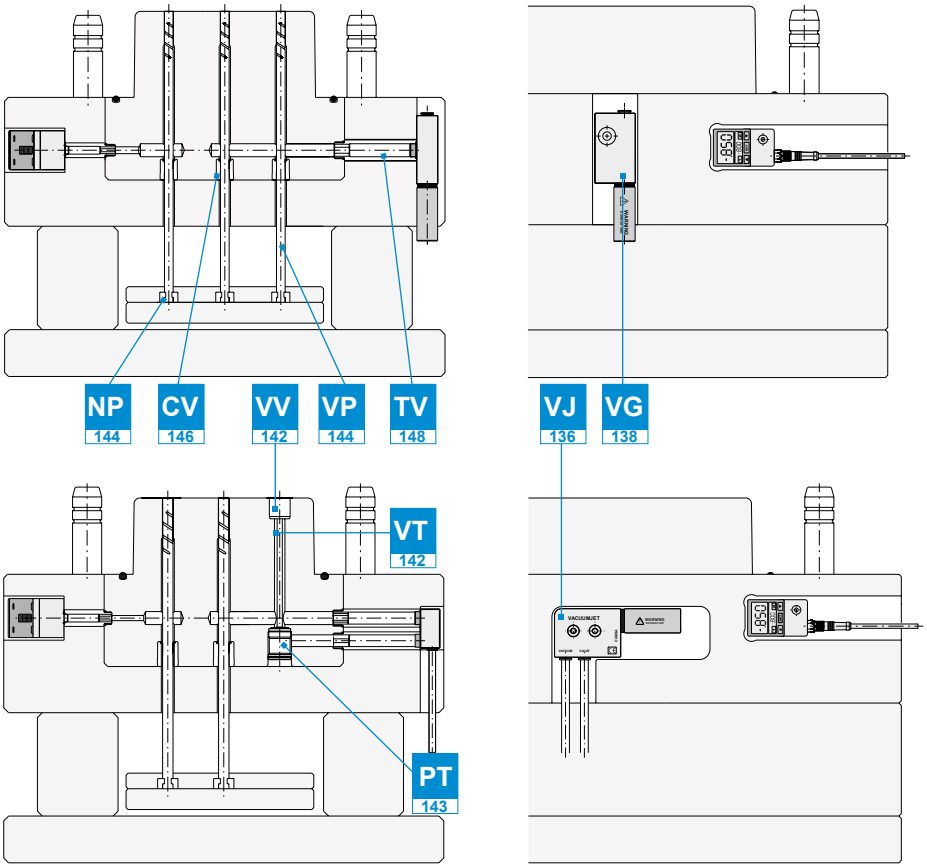

VM

INSTALLATION GUIDELINES

CUMSA
INNOVATIVE SOLUTIONS FOR YOUR MOLDS

Special Sizes Available On Request.
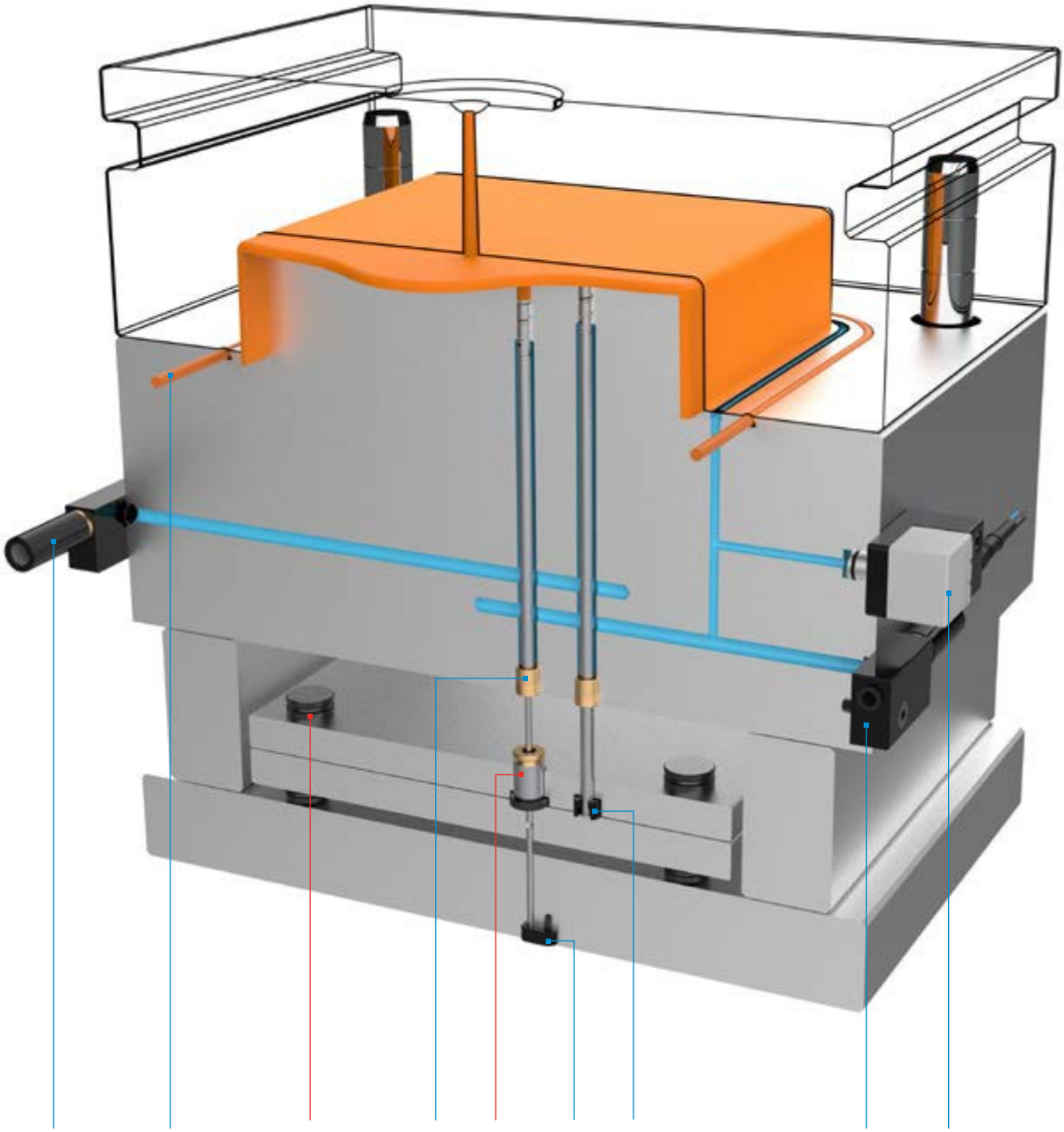
● Cad Insertion Point